CONSTRUCTION SPECIFICATIONS

The C635 manual gearbox is designed to be installed in front wheel drive systems with the engine mounted transversely.
It has a classic three-shaft layout and can transmit a max. torque of 350 Nm.

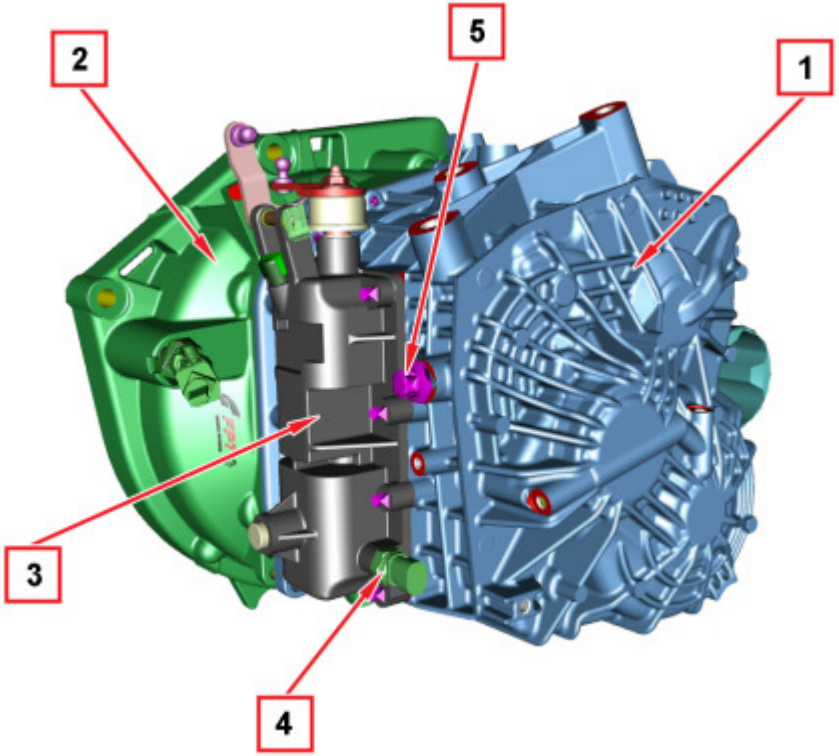

1. Gear casing
2. Clutch casing
3. Gear selection/engagement assembly
4. Reversing light switch

5. Reverse gear mounting fixing screw

The main specifications are as follows:

- manual gearbox with fixed idler (or cascade gear) with 6 transmission ratios plus reverse;
- all gears synchronised including reverse;
- idler wheel for reverse engagement;
- toothed wheels with helical teeth;
- one input shaft plus two layshafts (upper and lower);
- activation by hydraulic clutch;
- designed for matching with twin mass flywheel;
- casing split into two parts.

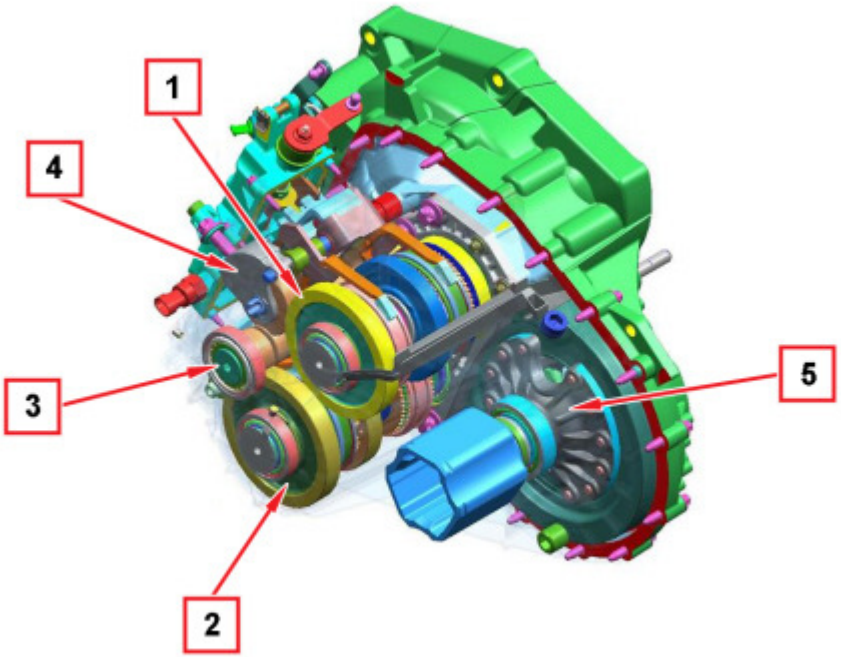

1. Upper layshaft
2. Lower layshaft
3. Main shaft
4. Reverse gear mounting
5. Differential

COMPOSITION OF THE GEARBOX

Inside the gearbox each transmission ratio is produced by means of a pair of gears that mesh constantly with one idling on the relevant shaft. Reverse gear is an exception, because it is made up of a set of three gears to reverse the direction of movement.

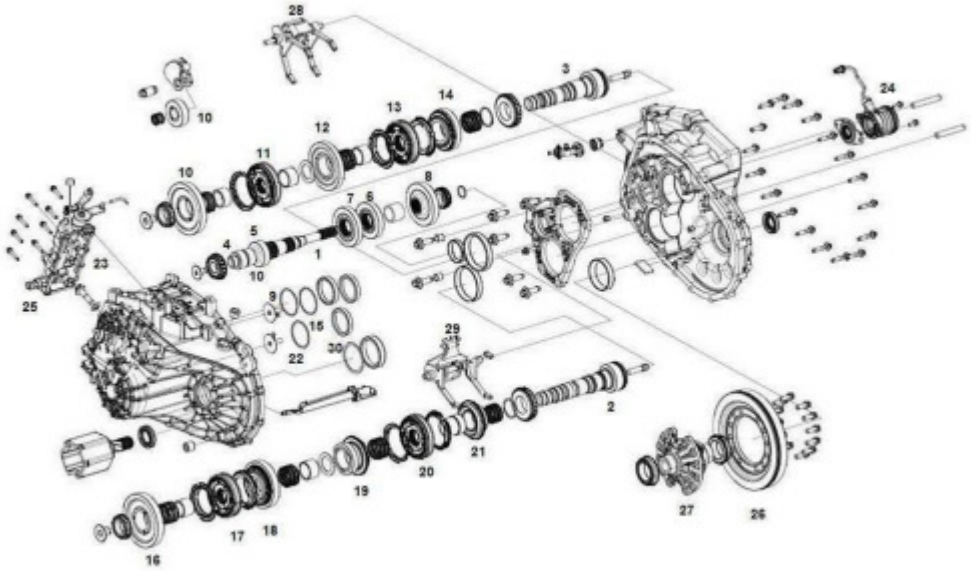

1. Main shaft

2. Lower layshaft
3. Upper layshaft
4. First speed gear on main shaft
5. Second speed gear on main shaft
6. Third speed gear on main shaft
7. Fifth speed gear on main shaft
8. Fourth/sixth speed gear on main shaft
9. Main shaft scraper ring
10. Reverse gear on upper layshaft
11. Reverse synchroniser on upper layshaft
12. Third speed gear on upper layshaft
13. Third/fourth speed synchroniser on upper layshaft
14. Fourth speed gear on upper layshaft
15. Upper layshaft scraper ring
16. First speed gear on lower layshaft
17. First/second speed synchroniser on lower layshaft
18. Second speed gear on lower layshaft
19. Fifth speed gear on lower layshaft
20. Fifth/sixth speed synchroniser on lower layshaft
21. Sixth speed gear on lower layshaft
22. Lower layshaft scraper ring
23. Gear selection/engagement kinematic component
24. Clutch control coaxial actuator
25. Reversing light switch
26. Differential ring gear
27. Differential casing
28. Upper layshaft fork
29. Lower layshaft fork
30. Differential scraper ring

The main shaft receives the drive from the crankshaft; when a gear is selected, the torque is transferred, through the corresponding gear pair, to the layshaft and, from there, to the fixed idler connected to the differential.

First and second speed engagement diagram

First speed engagement

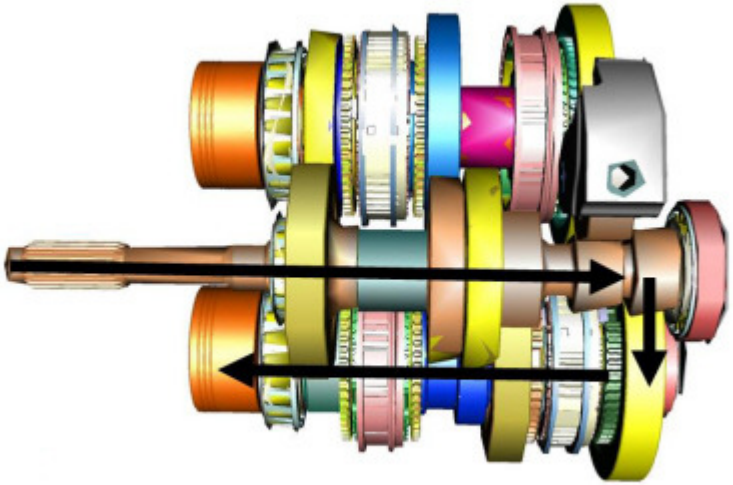

Second speed engagement

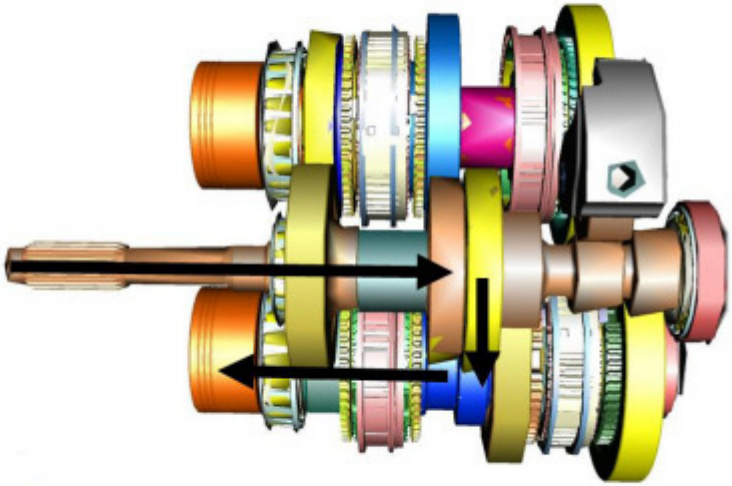

In first speed the power enters the gearbox through the main shaft and is transmitted, through the fixed drive gear, to the driven gear for the first speed fitted in neutral on the lower layshaft.
The activation of the synchroniser (for first and second speed) makes the toothed wheel form one piece with the layshaft and, by means of the fixed idler wheel, with the differential.
By moving the synchroniser in the opposite direction, the driven gear of the second speed forms one piece with the layshaft; the second speed is produced in this way.

Third and forth speed engagement diagram

Third speed engagement

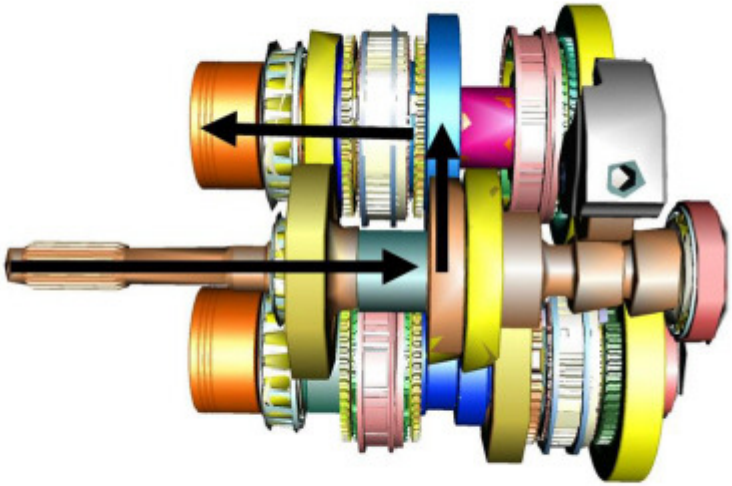

Fourth speed engagement

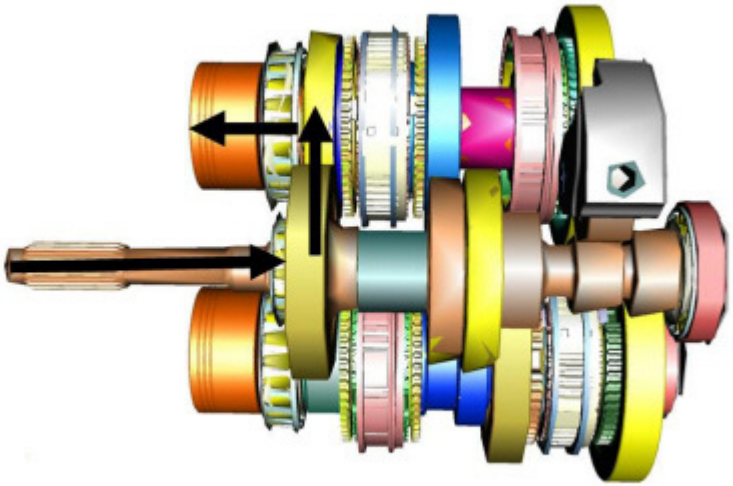

The power enters the gearbox through the main shaft and, by means of the fixed drive gear, is transferred to the driven gear, fitted on the upper layshaft; the activation of the synchroniser (for third and fourth speed) makes it possible to transfer the power to the toothed wheel for the fixed idler, also forming one piece with the differential ring gear, like that on the lower shaft.
Moving the synchroniser in the opposite direction produces the engagement of the fourth speed.

Fifth and sixth speed engagement diagram

Fifth speed engagement

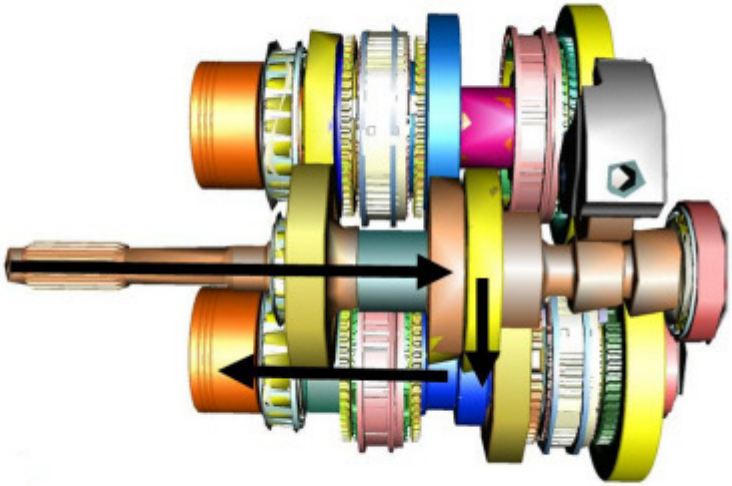

Sixth speed engagement

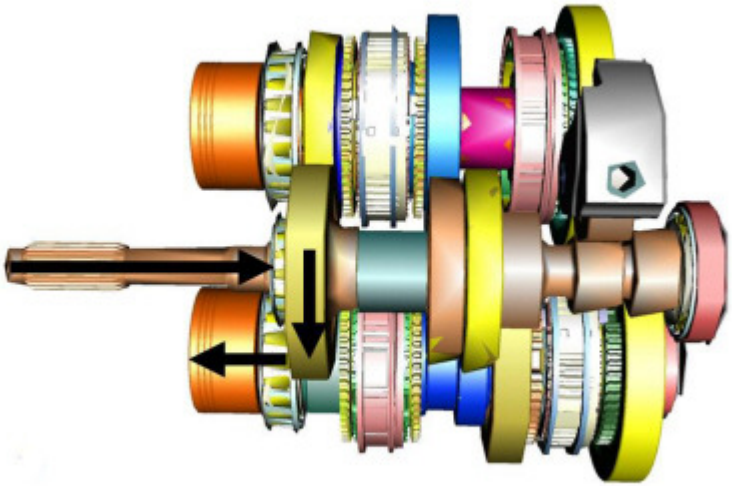

The power enters the gearbox through the main shaft and, by means of the fixed drive gear, is transferred to the driven gear, fitted on the lower layshaft; the activation of the synchroniser (for fifth and sixth speed) makes it possible to transfer the power to the toothed wheel for the fixed idler, also forming one piece with the differential ring gear.
To engage sixth speed, the same synchroniser is activated in the opposite direction.

Reverse engagement

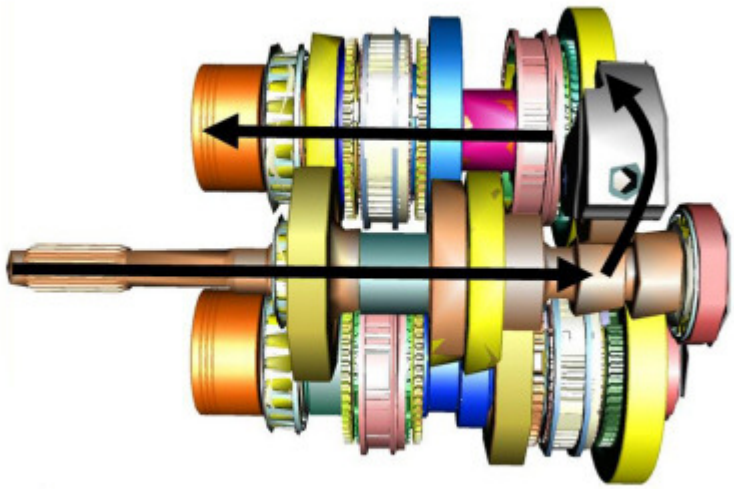

The power entering the gearbox is transferred from the main shaft to the idler wheel fitted on a suitable mounting integral with the gearbox casing; it transfers power to the reverse wheel fitted on the upper layshaft; at the same time, this allows the reversal of the movement.
The synchroniser for reverse gear makes the wheel form one piece with the upper layshaft, transferring the power to the differential.

Toothed wheels

MATERIALS AND MACHINING: the toothed wheels are subjected to variable loads over time which produce stresses and fatigue; for these reasons nickel-chrome steel alloys are used which afford good mechanical resistance.
After machining, the toothed wheels firstly undergo a finishing process (grinding and fettling) and afterwards a heat treatment that improves their resistance properties to fatigue and wear (binding and tempering).
SPECIFICATIONS: the toothed wheels used have helical teeth.
This allows the transmission of higher torques compared with those of the same size with straight teeth; in addition, toothed wheels with helical teeth operate more quietly.
Toothing with a high covering factor keeps more teeth meshed, with the advantage of smooth transmission.

Shafts

Main shaft

The gearbox main shaft has all toothed wheels integrated: in particular the toothed wheels for first, second and reverse are realised directly on the shaft through mechanical machining processes.
The third, fifth and fourth/sixth speeds are fitted by means of splining on the shaft itself and are an interference fit with the shaft.
The main shaft is supported at both ends by two tapered roller bearings.

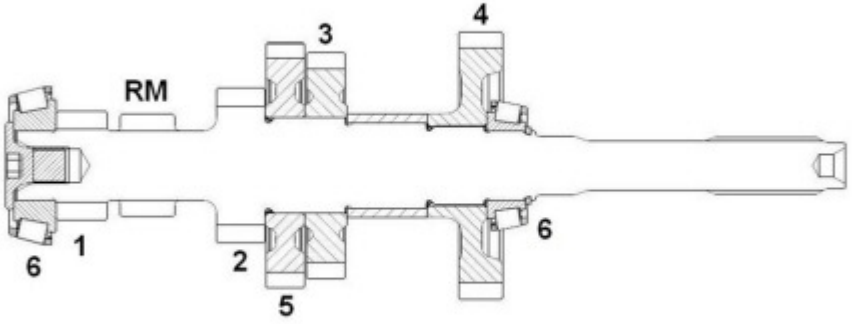

1. First speed gear
2. Second speed gear
3. Third speed gear
4. Fourth/sixth speed gear
5. Fifth speed gear
6. Bearings

Upper layshaft

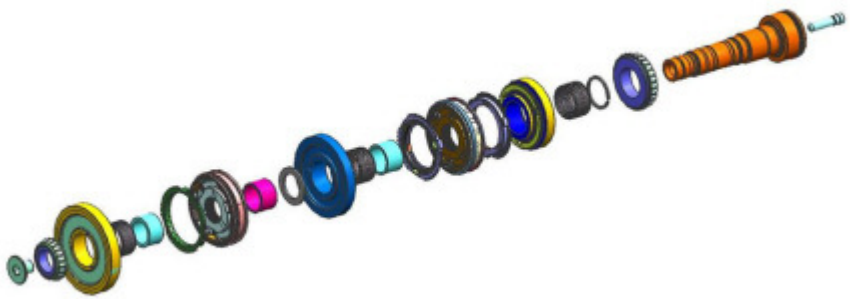

The upper layshaft supports the toothed wheels that produce third and fourth forward speeds and reverse; these toothed wheels are all fitted in neutral on needle bearings.
There are two synchronisers: one to form one piece between the toothed wheels for third or fourth speed with the shaft, the other for reverse.
The fourth speed and reverse synchronisers are two-cone type, while the synchroniser for third speed is three-cone type.
On the front end of the shaft there is a toothed wheel that transfers the power to the differential ring gear.
The upper layshaft is supported at both ends by two tapered roller bearings.

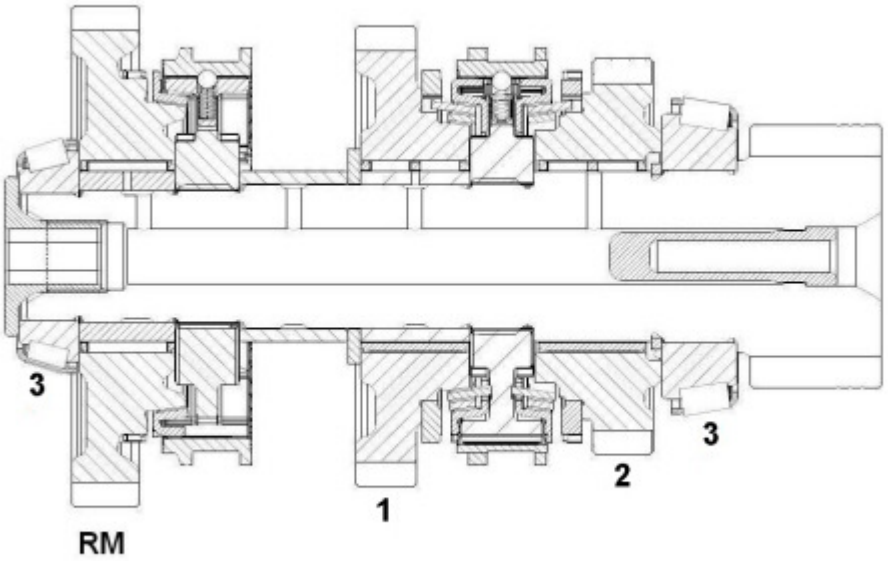

1. Third speed gear
2. Fourth speed gear
3. Bearings

Lower layshaft

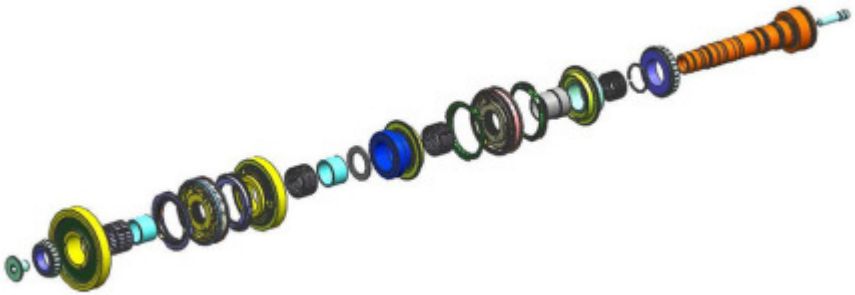

The first, second, fifth and sixth speed toothed wheels are fitted on the lower layshaft.
The lower layshaft is supported at both ends by two tapered roller bearings.

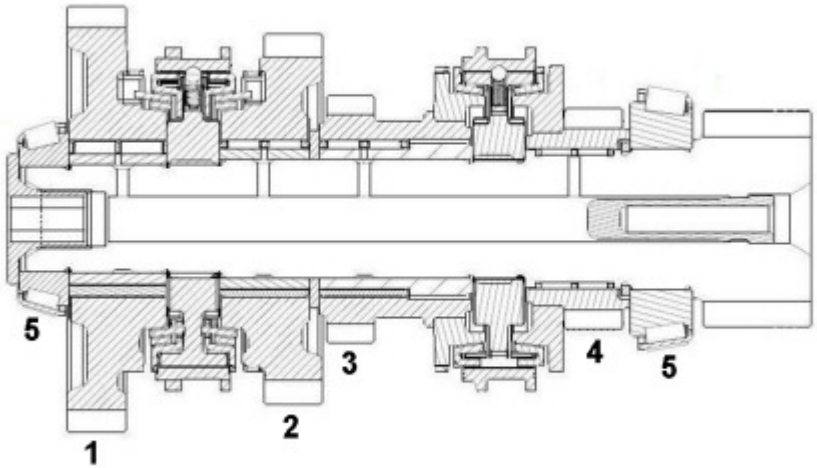

1. First speed gear
2. Second speed gear
3. Fifth speed gear
4. Sixth speed gear
5. Bearings

Synchronizsers

The C635 gearbox uses two synchroniser types:
- two-cone for the fourth, fifth and sixth speed and reverse
- three-cone for the first, second and third speed.

Two-cone synchronisers are formed by a set of two tapered clutches, that distribute the load that derives from the synchronisation of the toothed wheel and shaft speeds onto two friction surfaces.
In this way, gear engagement is easier.
Three-cone synchronisers are formed by a set of three tapered clutches, that distribute the load that derives from the synchronisation of the toothed wheel and shaft speeds onto three friction surfaces.
In this way, the gear engagement movement is easier because it is used to improve continuity and progressiveness of torque transfer among the shafts.
First-second speed synchroniser

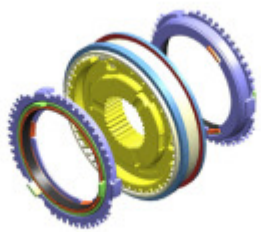

Third-fourth speed synchroniser

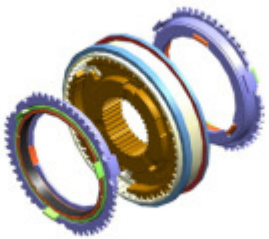

Fifth-sixth speed synchroniser

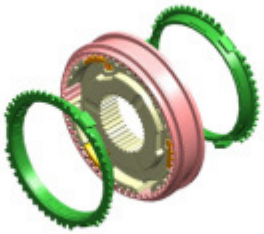

Reverse gear synchroniser

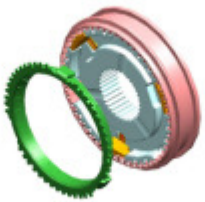

Gear selection/engagement assembly

The gear selection/engagement assembly comprises a kinematic component connected, by means of flexible cables to the control lever in the passenger compartment.
The kinematic arrangement has two possible movements:
- vertical travel selects the synchroniser
- rotational movement activates the fork corresponding to the synchroniser.

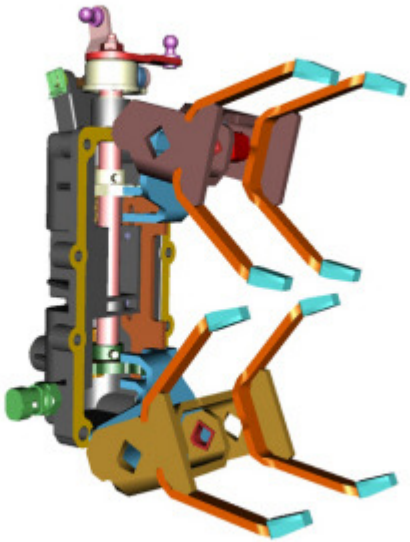

The gear selection/engagement system is connected to the selector dog which, in its turn, operates the sliding rods housing the synchroniser sleeve control forks.
A safety device prevents unintentional reverse engagement.
Each synchroniser, like the rods, is used to engage two speeds.
The selector dog is kept in the engagement position by the action of spring-loaded balls which engage in the relevant indentations on the synchroniser sleeve; a further indentation is used to keep the dog in neutral position.

Differential

This is the mechanical device which performs two fundamental actions to drive the vehicle:
- it divides drive torque equally on the two driveshafts;
- it allows the drive wheels to assume different rotation speeds.

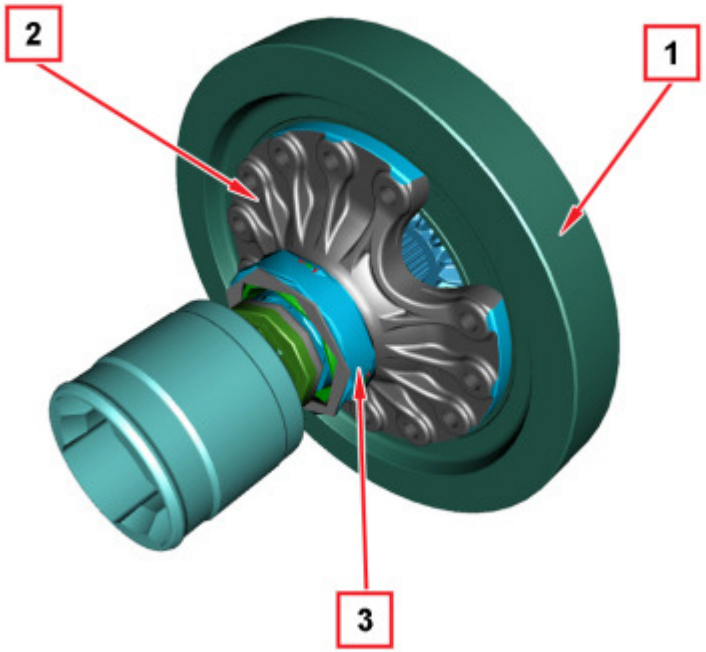

1. Ring gear
2. Differential casing
3. Bearing